PRODUCT DATA SHEET

MicroSENS 100-VS

MICRO-HYBRID

CO2

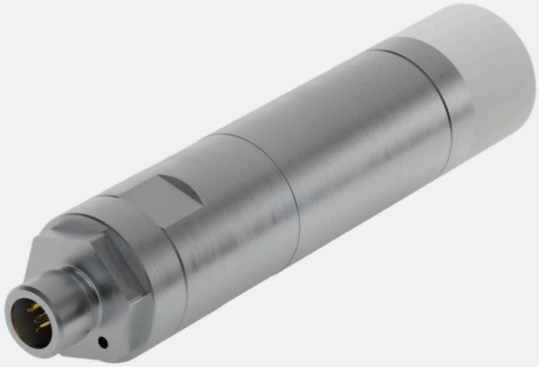

Art. no. 7208.01-B

NDIR gas sensor for CO_2 measurement in incubators, vapour sterilizable at 100 °C.

The MicroSENS 100-VS is optimized for accurate CO_2 monitoring up to 5 Vol.-% to maintain ideal conditions for cell and tissue growth. Designed for direct installation inside the incubation chamber, it measures the actual atmosphere experienced by the cells using precise infrared absorption technology. Its robust stainless steel housing ensures durability and allows repeated sterilization at 100 °C, while temperature, pressure, and humidity compensation guarantee stable performance across varying environmental conditions. With both digital and analog output options, the MicroSENS 100-VS enables straightforward integration into a wide range of monitoring and control systems. Application-specific core components and electronic modules are manufactured in-house.

Applications

- Pharmaceutical industry
- Cell cultivation
- Tests in cellular processes

Product benefits

- Long service life
- High reliability
- Easy decontamination through steam sterilization at 100 °C
- Effective protection against contamination as the sensor head is not removed during sterilization
- Low maintenance and minimal follow-up costs
- Mechanical design enables flexible use, also for retrofit/retrofitting applications
- Resistant to cleaning agents
- Simplified integration and replacement

Features

- IR dual-beam technology
- Temperature and pressure compensated
- Humidity compensation
- Digital and analog interface
- Stainless steel housing (1.4404)
- Sensor can be changed without tools

PRODUCT DATA SHEET › gas sensors › MicroSENS 100-VS| © Micro-Hybrid-Electronic GmbH | 2026-02 | All rights reserved

GAS SENSORS

MH SHOP
shop.micro-hybrid.com

Online shop for IR components and sensors. Filter products simply by selecting the desired properties and request your quotation.

Technical data

Measurement performance

Technical parameter	Value	Unit
Measuring gas	CO_2	
Measuring range	0 ... 20	Vol.-%
Start-up time	< 15	s
Warm up time	< 5	min
IP protection class	IP30	
Repeatability	< 0.11	% FS
Accuracy	± (2 % of reading + 0.2 Vol.-%)	
Response time t90 with filter	< 25	s
Digital resolution	0.001	Vol.-%
Temperature influence	0.125	% FS / 10 K
Pressure influence	0.004	% FS / 10 hPa
Long-term stability	≤ ± 0.2 Vol.-% at 5 Vol.-% / year	

Inputs and outputs

Operating voltage analog connection	15 ... 24	V DC
Operating voltage digital connection	12 ... 24	V DC
Nominal power consumption	< 2	W
Digital output signal	RS485	

PRODUCT DATA SHEET › gas sensors › MicroSENS 100-VS| © Micro-Hybrid-Electronic GmbH | 2026-02 | All rights reserved

GAS SENSORS

MH SHOP
shop.micro-hybrid.com

Online shop for IR components and sensors. Filter products simply by selecting the desired properties and request your quotation.

Operating environment

Technical parameter	Value	Unit
Operating temperature	0 ... 60	°C
Storage temperature	-20 ... 85	°C
Max. sterilization temperature [1]	100	°C
Humidity [1]	0 ... 95 % relative humidity (non condensing)	
Air pressure	500 ... 1200	hPa

[1] Sensor head only

PRODUCT DATA SHEET › gas sensors › MicroSENS 100-VS| © Micro-Hybrid-Electronic GmbH | 2026-02 | All rights reserved

Typical operating characteristics

Pin out

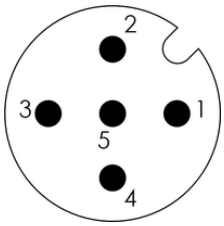

- Pin 1 – 485+ / A
- Pin 2 – 485- / B
- Pin 3 – GND
- Pin 4 – VCC
- Pin 5 – Current out

Sensor overview

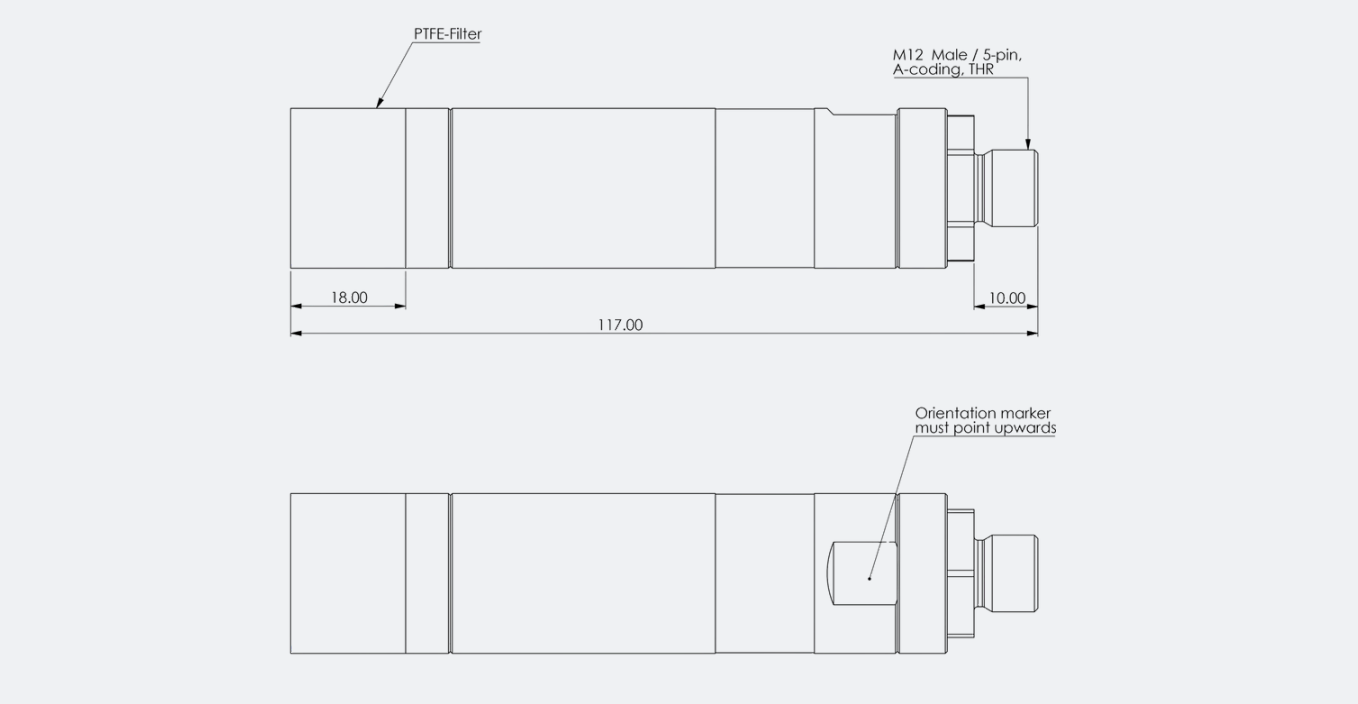

Mounting ring bottom view

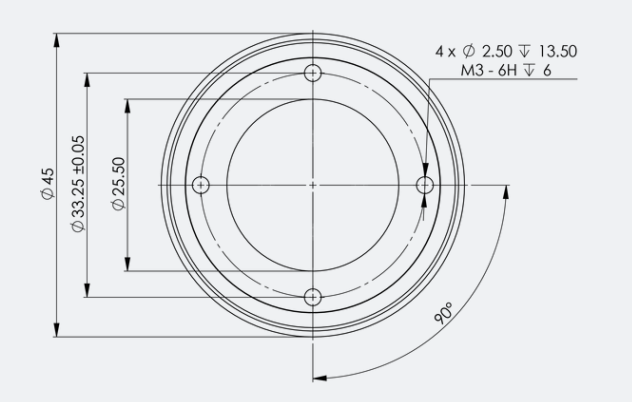

Mounting ring panel cut out

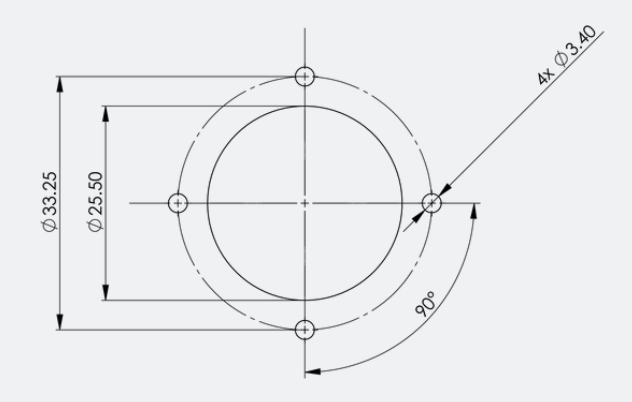

PRODUCT DATA SHEET › gas sensors › MicroSENS 100-VS| © Micro-Hybrid-Electronic GmbH | 2026-02 | All rights reserved

Mounting ring side view

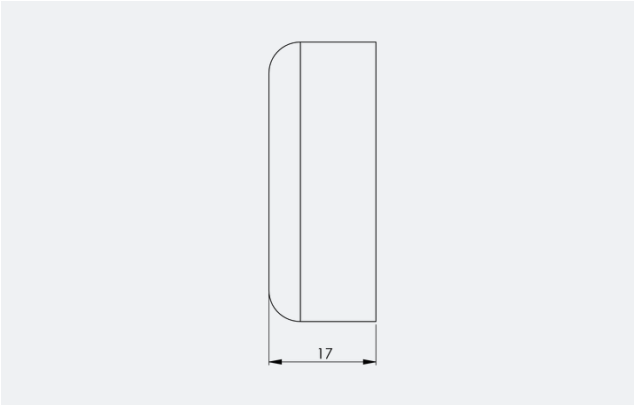

All geometrical dimensions in mm

Disclaimer

All rights reserved. All information in this data sheet is based on latest knowledge, results of practical experience and tests carried out. Earlier specifications are hereby invalid. All specifications – technical included – are subject to change without notice. It is the customer's responsibility to ensure that the performance of the product is suitable for customer's specific application. No liability is accepted for indirect damage, in particular for the use or inability to use the product. Any liability we may have is limited to the value of the product itself.

PRODUCT DATA SHEET › gas sensors › MicroSENS 100-VS| © Micro-Hybrid-Electronic GmbH | 2026-02 | All rights reserved